THERMAL ENERGY STORAGE

Big Batteries that Enhance Turbine Inlet Cooling Systems

Guy Frankenfield, PE
(972) 823-3300
Guy.Frankenfield@dntanks.com
www.DNTANKS.com

Sponsored by: TURBINE INLET COOLING ASSOCIATION turbineinletcooling.org

February 13, 2013; 1 PM (U.S. Central Time)
http://www.meetingzone.com/presenter/default.aspx?partCEC=4147918
Call-In Number: 1-877-406-7969
Access Code: 4147918 #

Introductions

Annette Dwyer

- Munters Corporation
- Vice-Chair, TICA

Guy Frankenfield, PE

DN Tanks

Secretary, TICA

Who is TICA?

- The Turbine Inlet Cooling Association (TICA) promotes the development and exchange of knowledge related to gas turbine inlet cooling
- The TICA website is one-stop source of TIC technical information, including Installation Database & Performance Calculator
- TICA is a non-profit organization

TICA Member Benefits

- Access to full/detailed version of TIC Installation Database
- Access to full/detailed version of the TIC Technology Performance Calculator
- GT Users get access to the TIC Forum
- Suppliers have access to information space on the TICA Website and access to booths at various electric power trade shows

Become a Member

Turbine Inlet Cooling Technologies - Webinar Schedule

- August 22, 2012: Wetted-Media Evaporative Cooling
- October 18, 2012: Fogging
- December 19, 2012: Chiller Systems
- **February 13, 2013: Thermal Energy Storage**
- April 17, 2013: Wet Compression
- June 19, 2013: Hybrid Systems

Agenda for Today's Presentation

- Thermal Energy Storage (TES) Concept
- TES application with Turbine Inlet Chilling (TIC) Systems
- Case Studies of a TES with TIC at Natural Gas Power Plants


iPad
4:25 PM
Hello...
Q W E R T Y U I O P
A S D F G H J K L Search
Z X C V B N M ! , ? .
.?123
.?123

Energy Storage Concept

- Energy is stored during “off-peak” periods, then distributed during “peak” periods.

- Examples of energy storage systems:
  - Battery in a mobile phone
  - The human body
  - Thermal Energy Storage (**TES**)

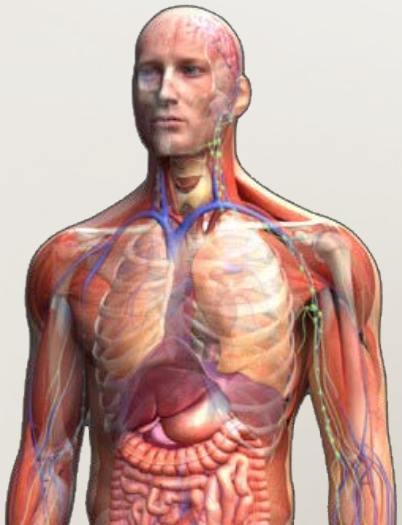

TES with Chilled Water Cooling Systems

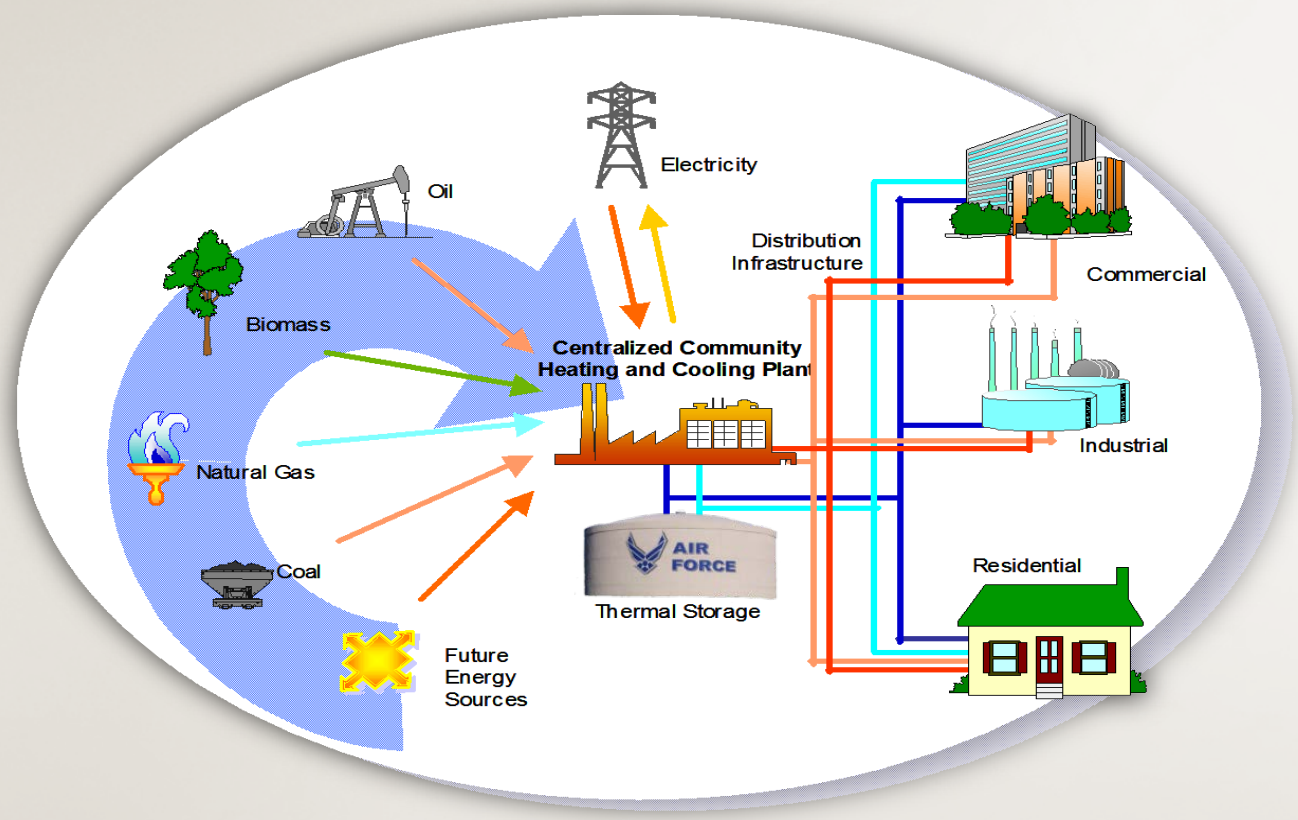

TES provides daily dispatch-able electrons

Thermal Energy Storage

- Proven energy storage technology – over 30 years of demand-side history)
- Economical first cost – low cost of capital compared to other energy storage
- Long expected useful life – 30+ years
- Practical for extended discharge periods – many hours
- Relatively easy to site (technically and environmentally)

TES Applications


College Campuses


Private Industry & Data Centers

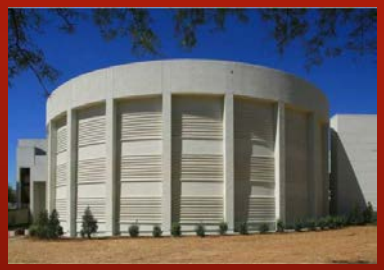

Government & Municipalities


Natural Gas Power Plants

Electric Grid Components

Generation

Transmission & Distribution

End User

U.S. Electric Grid

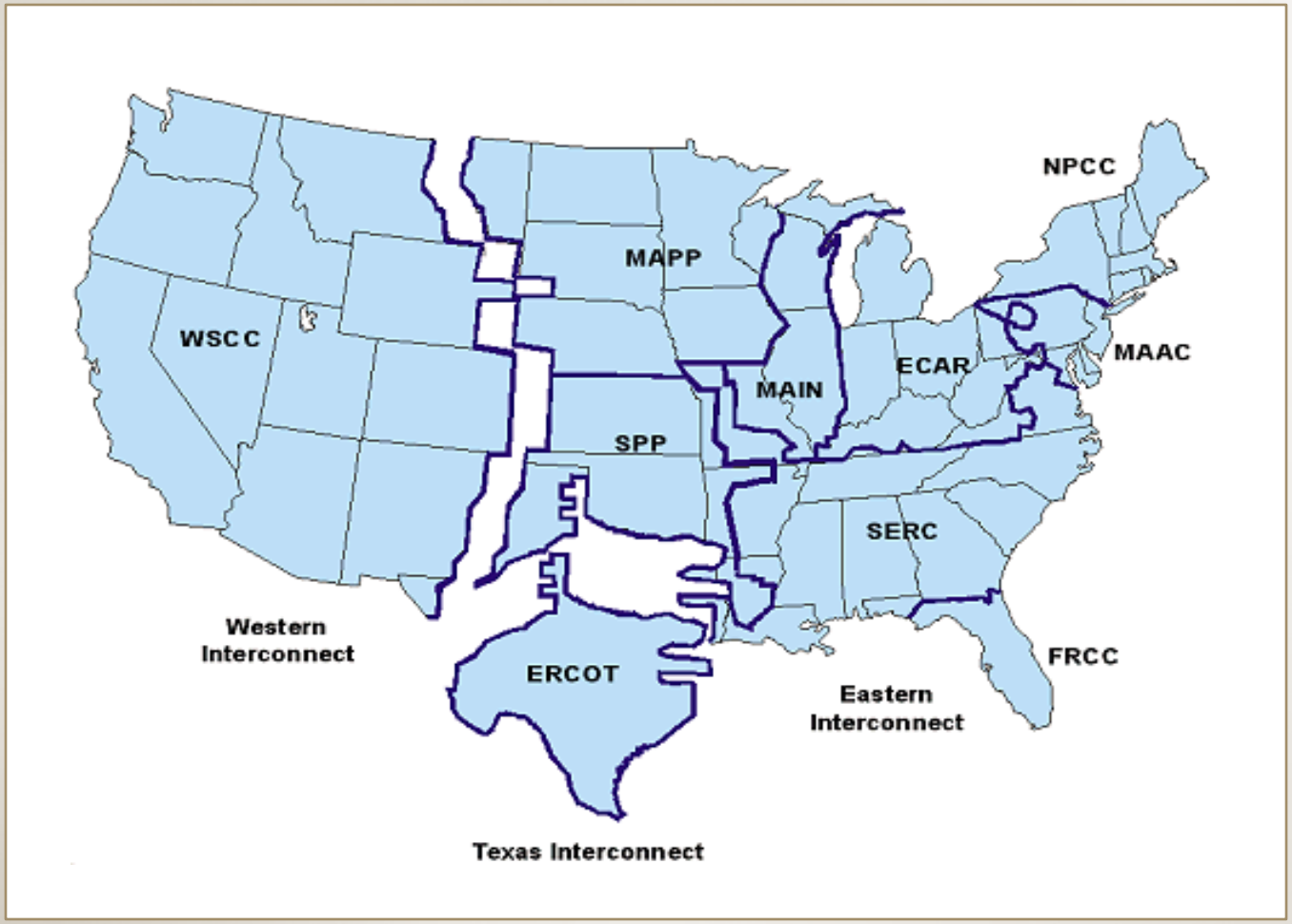

ERCOT Grid – Hourly Load

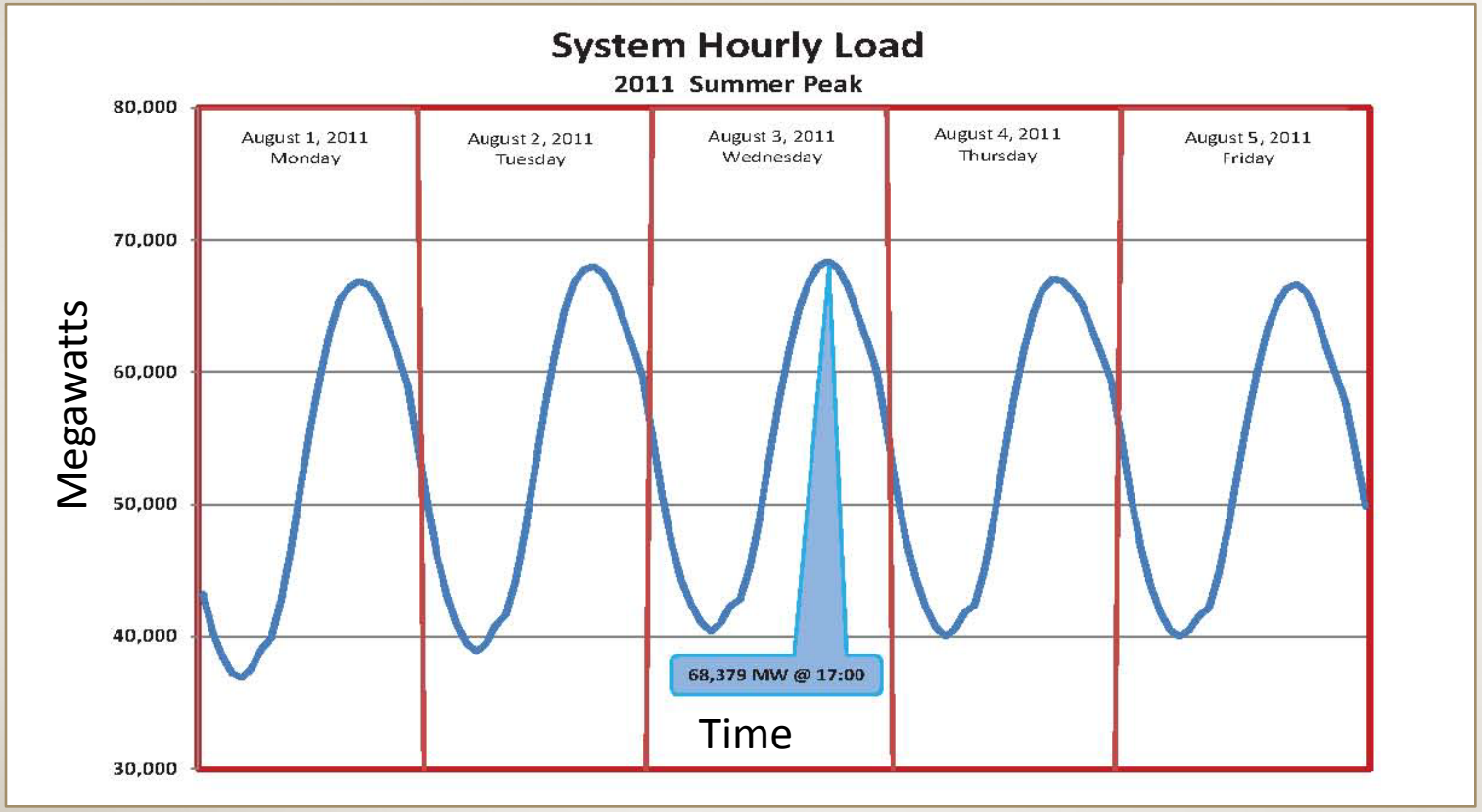

Source: ERCOT, *www.ercot.com*

ERCOT Grid - $/MWh

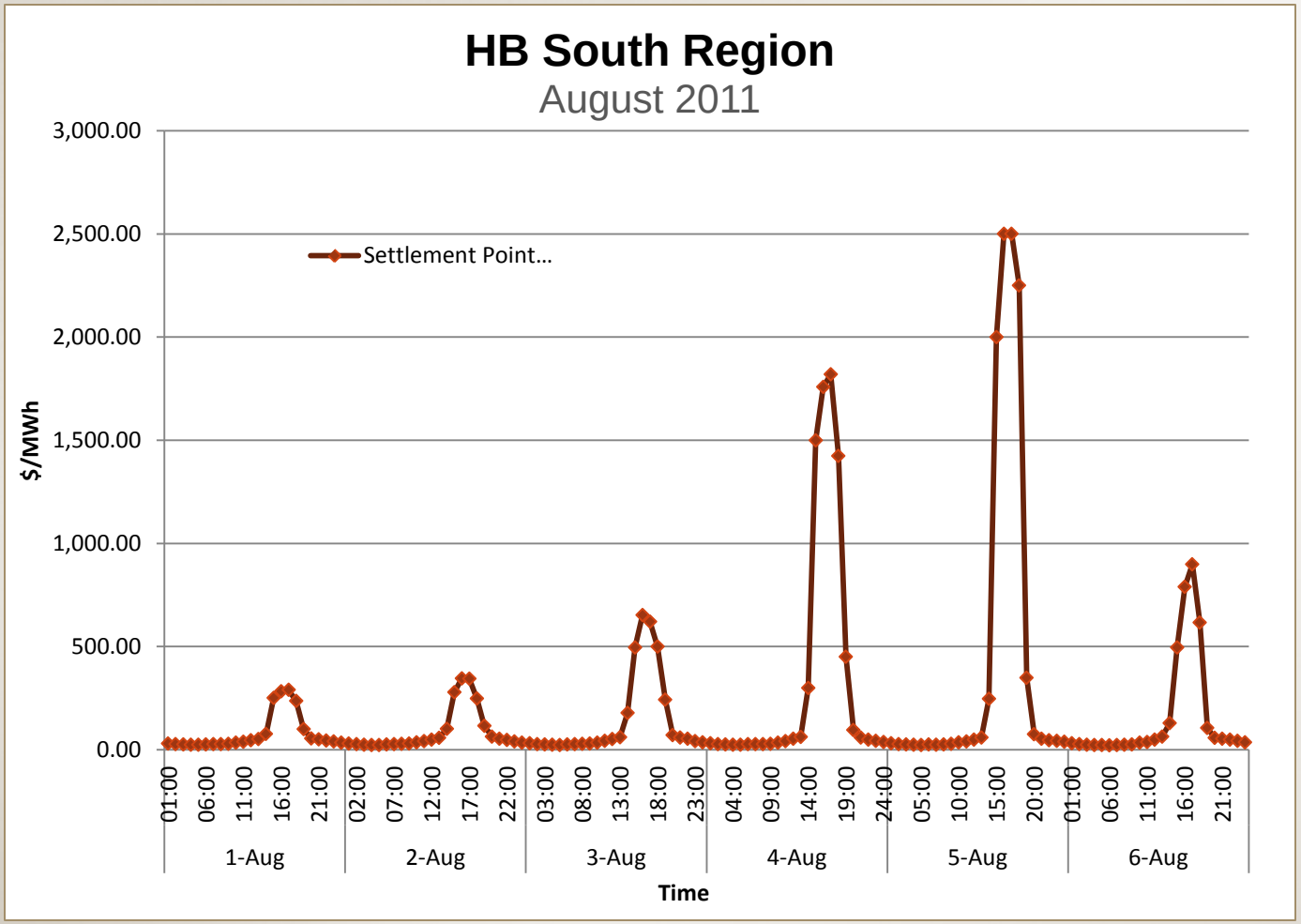

Source: ERCOT, *www.ercot.com*

2013 Peak Load Week - Generation by Fuel Type

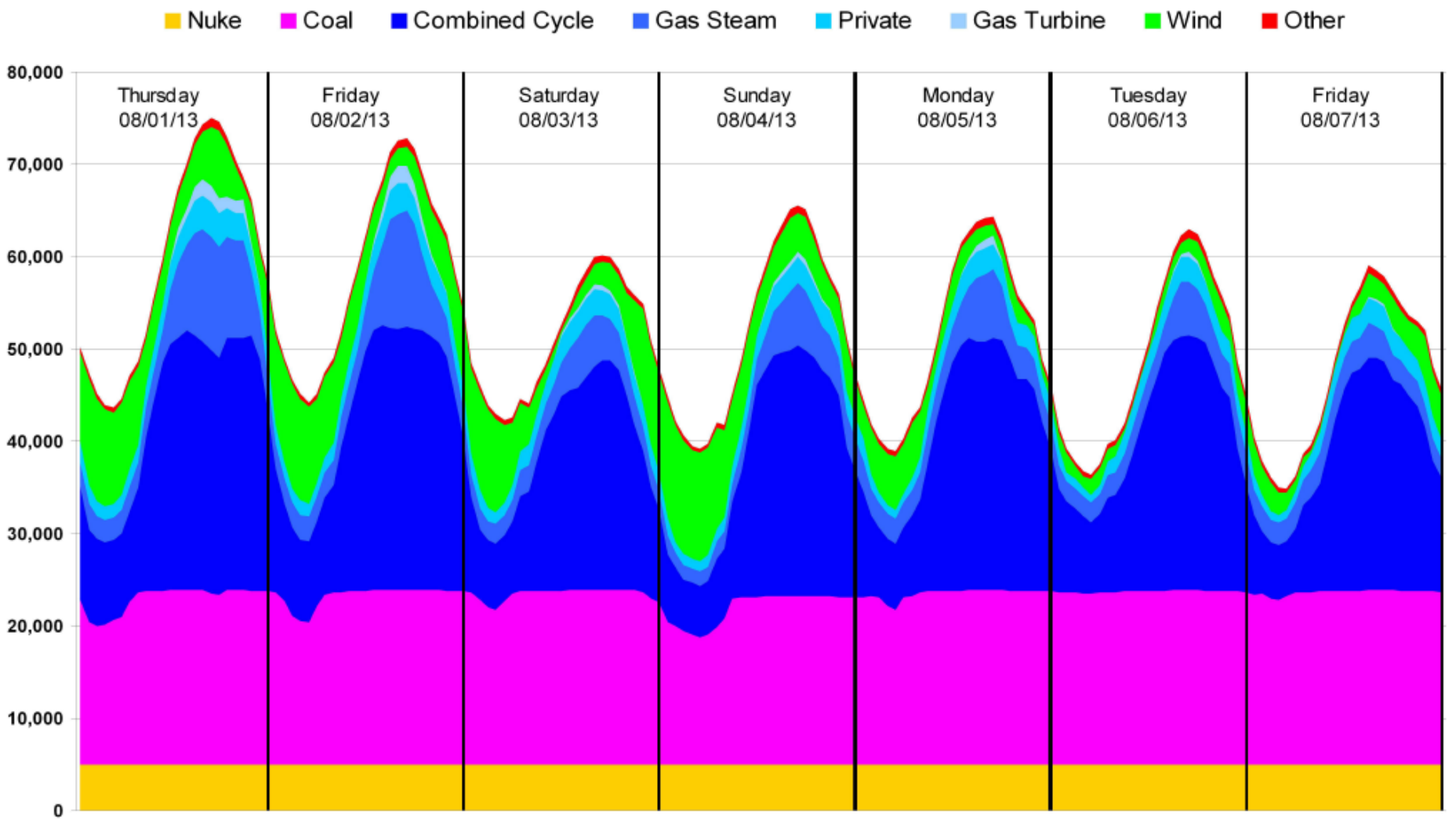

Note – no changes to existing reserves requirements were assumed for this analysis

Natural Gas Power Plant Performance

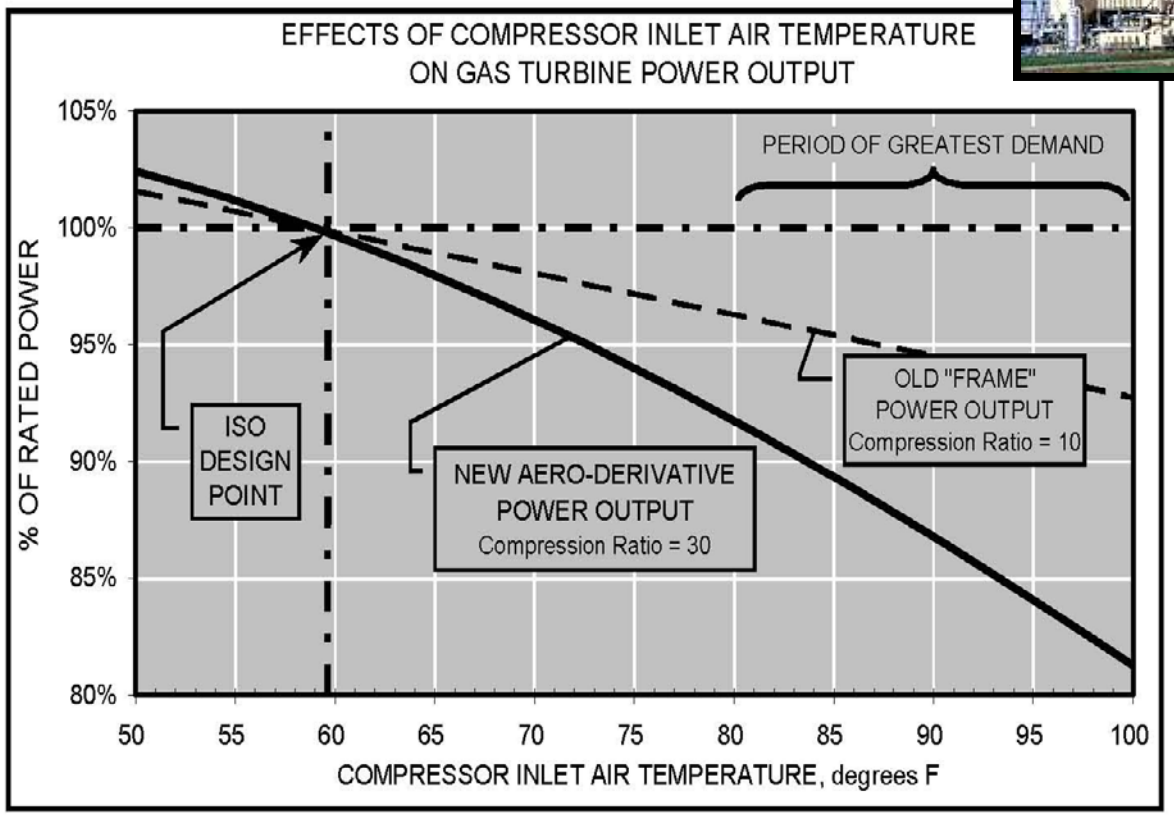

Performance goes down as outside air temp goes up

Turbine Inlet Cooling (TIC)

- CT output highly sensitive to inlet air temp:
  - Warmer air = less density = less mass = less power
  - Frame CT's can lose 15-25% of design power

- Cooling the inlet air aids hot weather output:
  - Chiller-based cooling typically provides 45°F to 50°F inlet air; gains 15 to 25%+ output <u>and</u> improves heat rate;
  - But chiller plants can consume power as a parasitic load during those peak hot weather periods of time

But TIC capital $/kW is less than even the simplest Combustion Turbines.

Turbine Inlet Cooling Improves NG Power Plant Performance

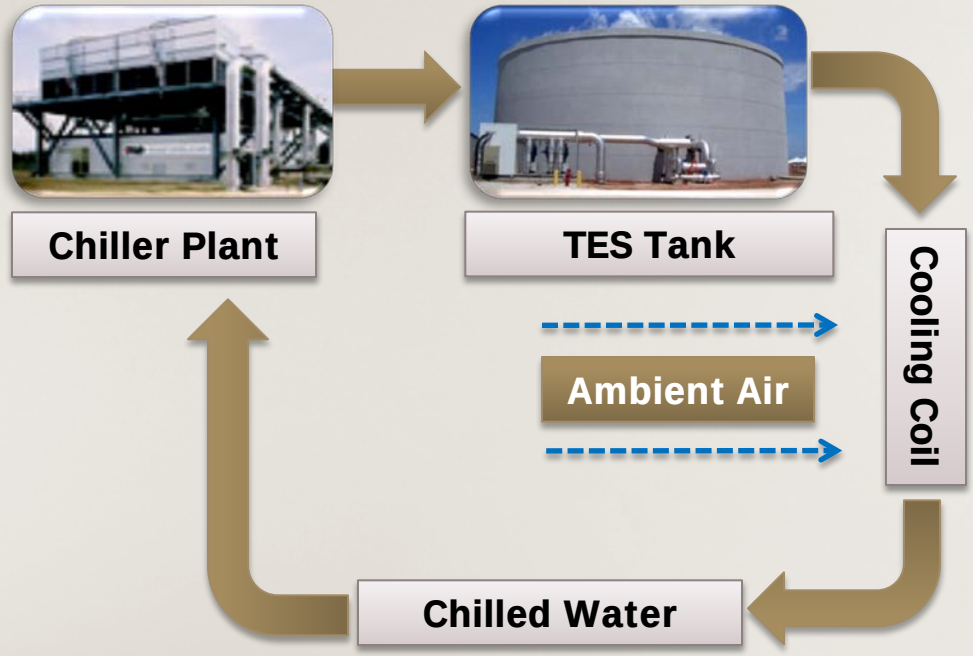

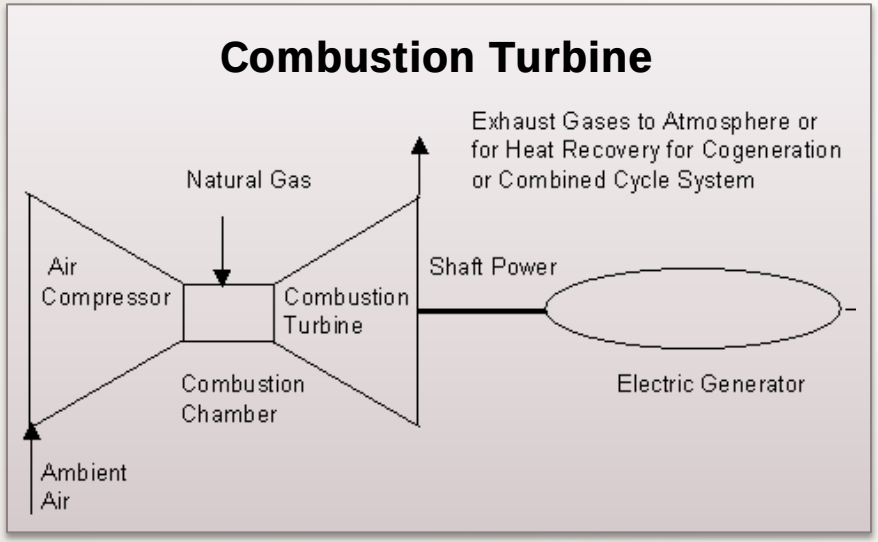

Chilled Water TES Concept

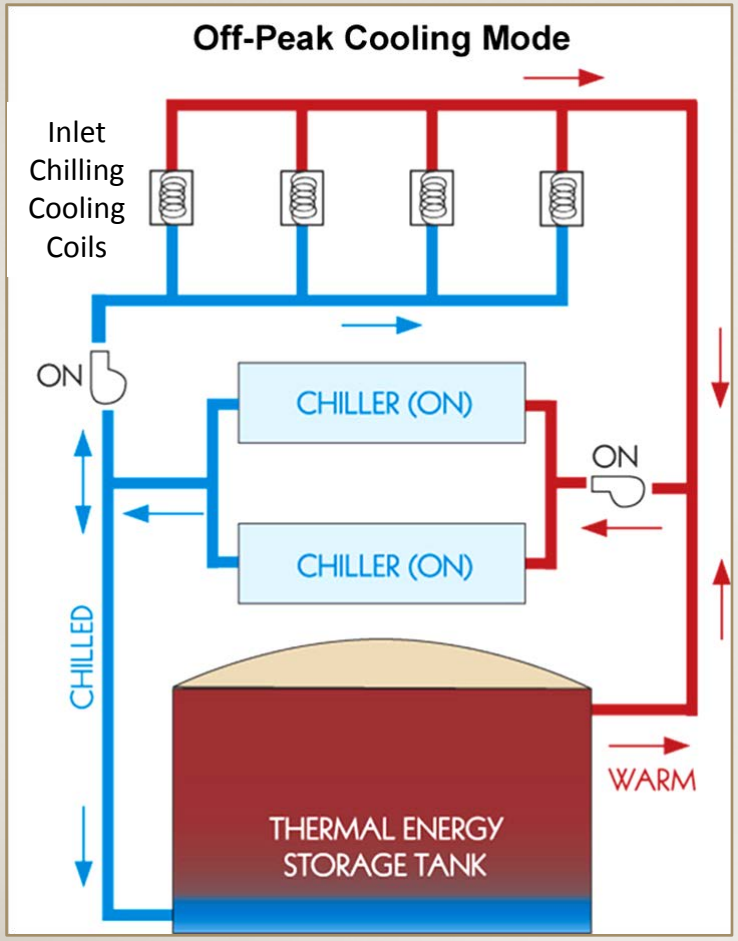

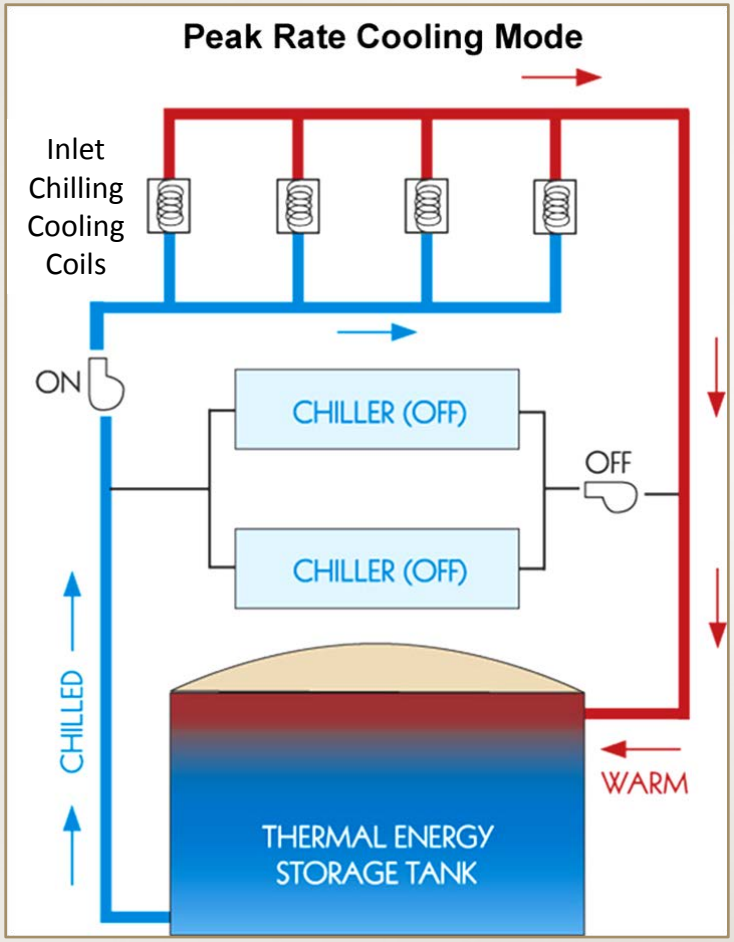

Electric Load Profile

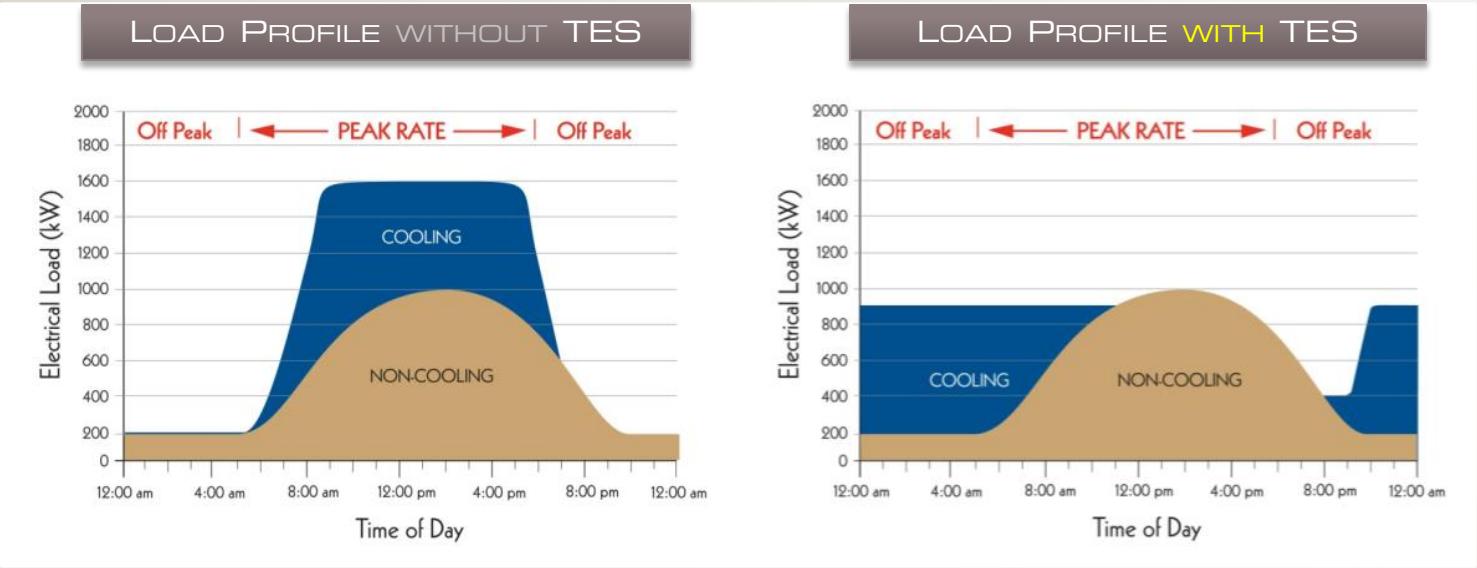

With TES:

- permanent electric load shift from peak periods to off-peak periods
- energy reduction by taking advantage of cooler ambient conditions at nighttime and running chillers at their optimum conditions

Thermal Energy Storage (TES)

- TES can be Ice or Chilled Water (CHW)
- Shifts chiller load to off-peak periods
- CHW TES is increasingly used with TIC:
  - Shifts parasitic load to off-peak, maximizes net kW;
  - Reduces chiller plant capacity and capital cost, which can save <u>more</u> than the cost of the TES

Thus, by incorporating CHW TES with TIC:

- Net capital cost is down
- Net kW is up

Examples of TIC with TES





- Escondido, CA – SDG&E
- New Canton, VA – Dominion
- Jacksboro, TX – Brazos-Jack 1
- Princeton, NJ – Princeton University
- Pasadena, TX - Calpine

Case Study

1

Riyadh, Kingdom of Saudi Arabia

- 10 existing simple cycle CT's, each 75 MW
- At the design ambient air temp of 50 °C (122 °F), power output is only 75-80% of nominal rating
- Saudi Electricity Co. (national electric utility) needed to meet rapidly increasing demand, so they compared:
  - Adding 3 more CT's, or
  - Retrofit existing turbines with Inlet Cooling & TES

- TIC has lower capital $/kW than new CT's

Chilled Water TES with TIC

- 193,000 ton-hrs CHW TES
- CHW temps of 45.5°F supply / 86.1°F return
- 140 ft diameter x 70 ft high (8 million gallon) CHW TES tank
- Net power increase of 30% with TIC and TES in hot weather
- TES-TIC produces 180 MW at approximately $250/kW

- TES contributes 48 MW x 6 hrs/day

Case Study

2

Cleburne, TX – NG Power Plant

- Retrofit existing SGT6-5000F (501F) combustion turbine with an inlet cooling system:
  - New 1.74 MG TES tank
  - New 3,800-ton modular CHW plant with cooling coils & energy management system

Cleburne, TX – NG Power Plant

Power Plant Performance:

- Before - 227 MW @ 95°F DB / 75°F WB
- After - 266 MW @ T2 of 50°F
- Net - 37.5 MW (*16.6% Increase*)

TES-TIC Can Boost Power Plant Output

10 States with Highest MW Potential

STATE	Potential MW's From TIC - TES
TX	2,485
FL	1,286
CA	1,228
AZ	1,097
IL	1,070
GA	1,019
NC	846
LA	820
AL	770
PA	757

Estimated 30,000+ MW's of hot weather peaking potential in the US with TIC-TES

Basic TES System Sizing Requirements

- Key Performance Criteria
  - XX,XXX ton-hrs of useable cooling capacity
  - XX°F chilled water ΔT
  - X,XXX gpm max. chilled water flow rate

Summary

- Thermal Energy Storage (TES) is useful for most chilled water district cooling systems
- Turbine Inlet Cooling (TIC) with TES can increase the power output of a combustion turbine power plant on hot summer days
- There is a huge potential in the U.S. to add TIC-TES to existing NG power plants
- MW for MW, it is more economical to add TIC-TES to existing combustion turbines than to build new NG power plants

Guy Frankenfield, PE
Email: Guy.Frankenfield@dntanks.com

Q & A

Chilled Water TES - TIC

Photo compliments of Chicago Bridge & Iron Co.

- Trigen-Peoples District Energy - Chicago, IL (1994)
- 123,000 ton-hours, with 30 / 54 ºF CHWS / R temps (7% *SoCool* LTF)
- 127 ft diameter x 90 ft high (8,500,000 gallons)
- TES serves DC; TIC for 3 x 1.1 MW Turbomeca CTs (SC / CHP)

Chilled Water TES - TIC

Photo compliments of Chicago Bridge & Iron Co.

- Princeton University - Princeton, NJ (2005)
- 40,000 ton-hours, with 32 / 56 ºF CHWS / R temps (5.7% *SoCool* LTF)
- 80 ft diameter x 72 ft high (2,700,000 gallons), sited partially in a pit
- TES serves DC + TIC for 1 x 14.6 MW GE LM 1600 CT (SC / CHP)

Chilled Water TES - TIC

Photo compliments of Chicago Bridge & Iron Co.

- University of Texas at Austin - Austin, TX (2011)
- 30,000 ton-hours, with 40 / 52 ºF CHWS / R temps
- 104.5 ft diameter x 67.5 ft high (4,300,000 gallons)
- TES serves DC + TIC for ~100 MW of various CTs (SC / CHP) on campus

Chilled Water TES - TIC

Photo compliments of Chicago Bridge & Iron Co.

- Calpine-Clear Lake - Pasadena, TX (1999)
- 107,000 ton-hours, with ~39 / 64 ºF CHWS / R temps
- 6,400,000 gallons
- TES serves TIC for 3 x 137.3 MW W-501 D5 CTs (CC / CHP) - 21% boost